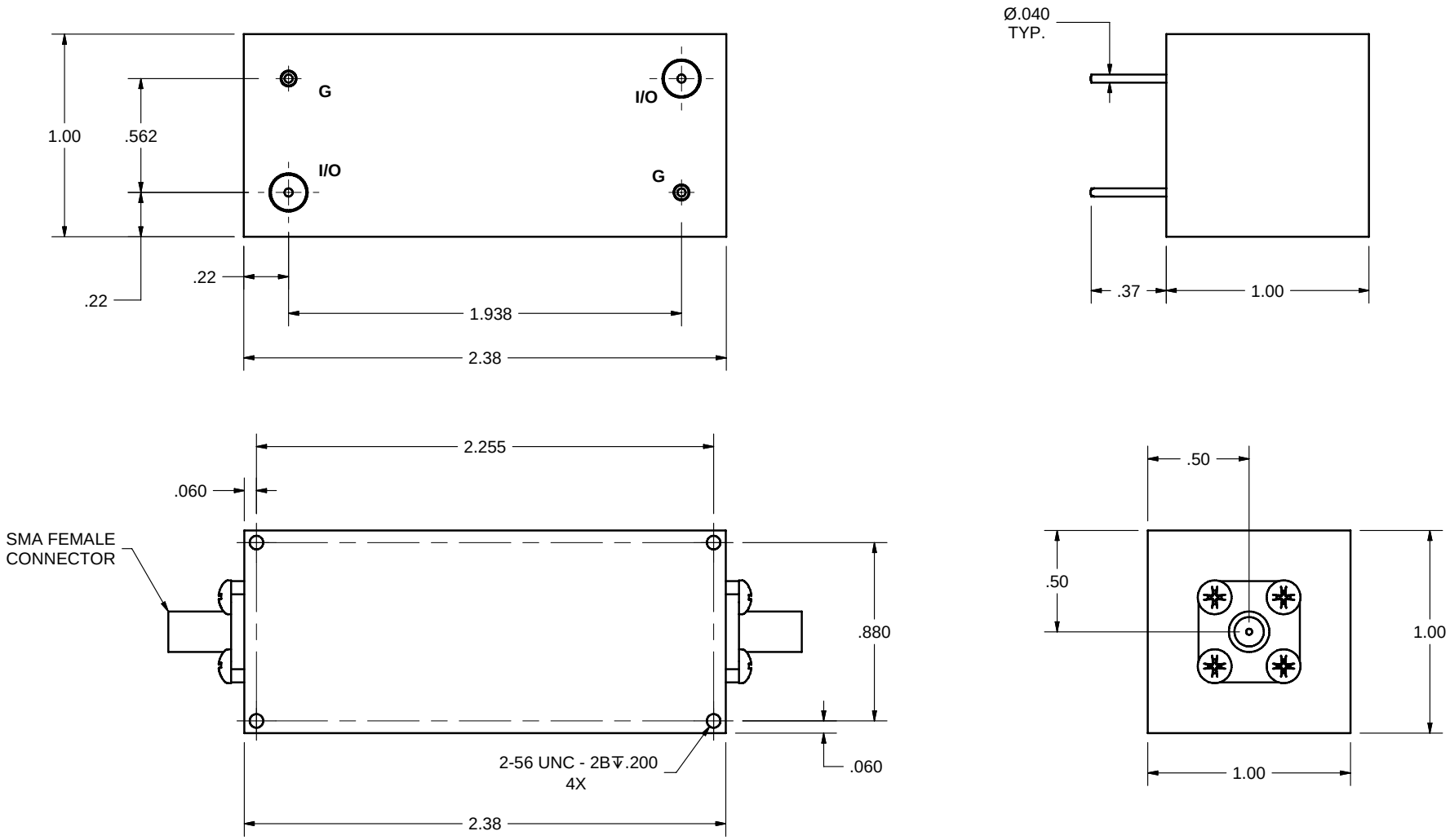
G
I/O
I/O
G
1.00
.562
.22
.22
1.938
2.38
Ø.040
TYP.
.37
1.00
2.255
.060
SMA FEMALE
CONNECTOR
.880
2-56 UNC - 2B↧.200
4X
.060
2.38
.50
.50
1.00
1.00